ALUMINUM & STEEL CLIPS

Precision made spring clips are available in a wide range of sizes. These clips will hold round, square and rectangular batteries or components with similar dimensions. Clips are manufactured from Aluminum or Spring Steel.

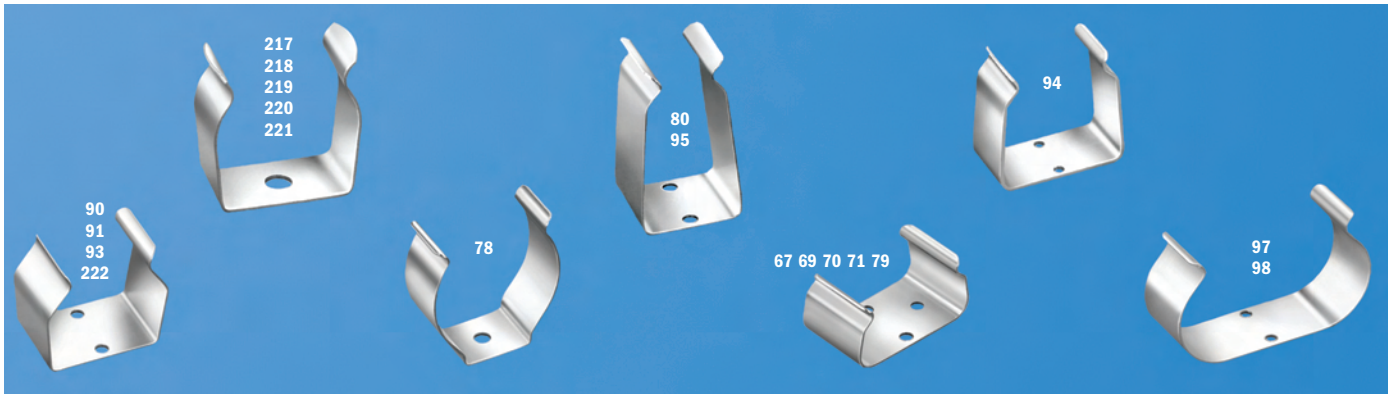

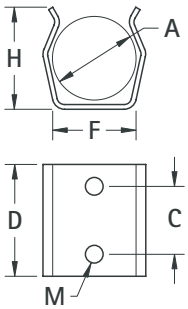

DWG. 1

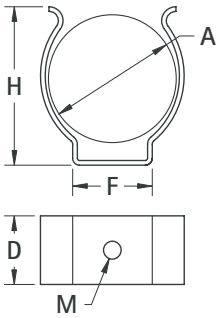

DWG. 2

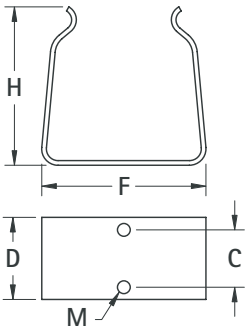

DWG. 3

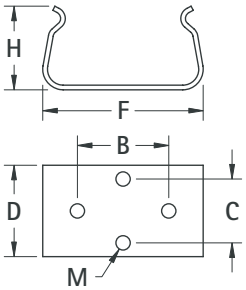

DWG. 4

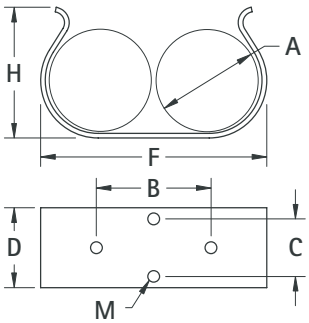

DWG. 5

MATERIAL: **Steel Clips:** Spring Steel, Nickel Plate **Aluminum Clips:** 2024-T3

CAT. NO.	DWG. NO.	A MIN MAX DIA. OR SIZE	FOR CELLS	B	C	D	F	G	H	M MTG HOLE(S)	MATERIAL THICKNESS	TYPE
67	3	.375 × .125 (9.5 × 3.2)	CRYSTAL	–	.187 (4.7)	.350 (8.9)	.410 (10.4)	.093 (2.4)	.210 (5.3)	.067 (1.7)	.016 (.41)	Steel
69	4	.562 (14.3)	AA (2)	.625 (15.9)	.437 (11.1)	.625 (15.9)	1.125 (28.6)	.093 (2.4)	.562 (14.3)	.098 (2.5)	.015 (.39)	Steel
70	4	.656 (16.7)	RM12 (2)	.625 (15.9)	.437 (11.1)	.625 (15.9)	1.343 (34.1)	.093 (2.4)	.740 (18.8)	.098 (2.5)	.020 (.51)	Alum.
71	3	.593 × 1.031 (15.1 × 26.2)	9 VOLT	–	.437 (11.1)	.625 (15.9)	1.031 (26.2)	.093 (2.4)	.687 (17.4)	.098 (2.5)	.015 (.39)	Steel
78	2	1.187 to 1.350 (30.1 to 34.3)	D	–	–	.500 (12.7)	.562 (14.3)	.250 (6.4)	1.218 (30.9)	.136 (3.5)	.020 (.51)	Steel
79	4	.650 × 1.280 (16.5 × 32.5)	9 VOLT	.625 (15.9)	.437 (11.1)	.625 (15.9)	1.050 (26.7)	.093 (2.4)	.765 (19.4)	.098 (2.5)	.015 (.39)	Steel
80	3	.650 × 1.280 (16.5 × 32.5)	9 VOLT	–	.437 (11.1)	.625 (15.9)	.675 (17.1)	.093 (2.4)	1.187 (30.1)	.098 (2.5)	.015 (.39)	Steel
90	1	.375 to .468 (9.5 to 11.9)	AAA	–	.437 (11.1)	.625 (15.9)	.312 (7.9)	.093 (2.4)	.453 (11.5)	.098 (2.5)	.020 (.51)	Alum.
91	1	.531 to .656 (13.5 to 16.7)	AA	–	.437 (11.1)	.625 (15.9)	.406 (10.3)	.093 (2.4)	.562 (14.3)	.098 (2.5)	.020 (.51)	Alum.
93	1	.875 to 1.125 (22.2 to 28.6)	C	–	.437 (11.1)	.625 (15.9)	.937 (23.8)	.093 (2.4)	.921 (23.4)	.098 (2.5)	.020 (.51)	Alum.
94	3	1.187 to 1.375 (30.1 to 34.9)	D	–	.437 (11.1)	.625 (15.9)	1.250 (31.8)	.093 (2.4)	1.218 (30.9)	.098 (2.5)	.032 (.81)	Alum.
95	3	.625 × 1.000 (15.9 × 25.4)	9 VOLT	–	.437 (11.1)	.625 (15.9)	.656 (16.7)	.093 (2.4)	1.125 (28.6)	.098 (2.5)	.020 (.51)	Alum.
97	5	1.031 (26.2)	C (2)	–	.437 (11.1)	.625 (15.9)	2.062 (52.4)	.093 (2.4)	1.125 (28.6)	.098 (2.5)	.020 (.51)	Alum.
98	5	1.312 (33.3)	D (2)	1.125 (28.6)	.437 (11.1)	1.000 (25.4)	2.656 (67.5)	.281 (7.1)	1.437 (36.5)	.098 (2.5)	.032 (.81)	Alum.
217	2	1.375 to 1.500 (34.9 to 38.1)	NiCd	–	–	.812 (20.6)	1.218 (30.9)	.406 (10.3)	1.430 (36.3)	.157 (4.0)	.025 (.64)	Steel
218	2	1.437 to 1.687 (36.5 to 42.8)	NiCd	–	–	.812 (20.6)	1.375 (34.9)	.406 (10.3)	1.531 (38.9)	.157 (4.0)	.025 (.64)	Steel
219	2	2.000 to 2.500 (50.8 to 63.5)	NiCd	–	–	.812 (20.6)	1.687 (42.8)	.406 (10.3)	2.156 (54.8)	.157 (4.0)	.025 (.64)	Steel
220	2	.187 to .203 (4.7 to 5.2)	5mm	–	–	.315 (8.0)	.158 (4.0)	.157 (4.0)	.280 (7.1)	.093 (2.4)	.010 (.25)	Steel
221	2	.859 to .890 (21.8 to 22.6)	.875 (22.2)	–	–	.468 (11.9)	.828 (21.0)	.234 (5.9)	.906 (23.0)	.157 (4.0)	.020 (.51)	Steel
222	1	.875 to 1.125 (22.2 to 28.6)	C	–	.437 (11.1)	.625 (15.9)	.937 (23.8)	.093 (2.4)	.921 (23.4)	.098 (2.5)	.020 (.51)	Steel

DIMENSIONS ARE FOR REFERENCE ONLY

CUSTOM CLIPS & CONTACTS

Keystone is fully integrated to meet your total design and production needs.

Manufacturing custom designs and modifications of standard items is our specialty.

Quotations on clips and contacts furnished promptly upon receipt of sample, sketch, print or CAD drawings.

NOTES